Summary in Graph

Exam Summary (GO Classes CS Test Series 2026 | Theory of Computation | Subject Wise Test 2)

Qs. Attempted:	0 (0 + 0)	Correct Marks:	0 (0 + 0)
Correct Attempts:	0 (0 + 0)	Penalty Marks:	0 (0 + 0)
Incorrect Attempts:	0 (0 + 0)	Resultant Marks:	0 (0 + 0)

Total Questions:	30 (15 + 15)
Total Marks:	45 (15 + 30)
Exam Duration:	90 Minutes
Time Taken:	0 Minutes

Individual Question Statistics

Select Metric: Marks Obtained

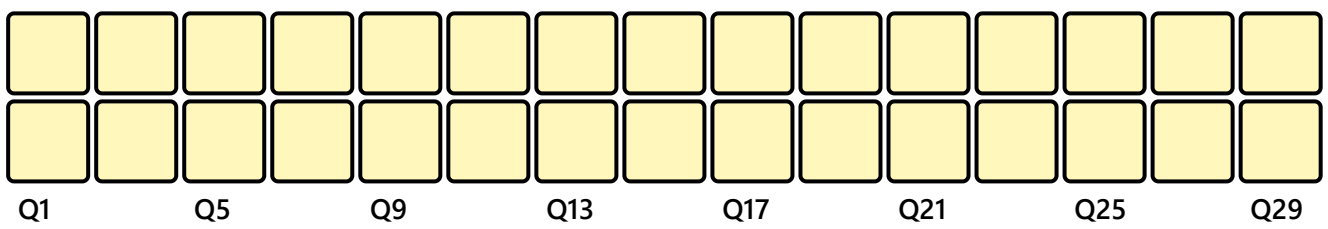

* Average Stats based on first-attempt stats of Top 10% (34) out of 337 users

EXAM RESPONSE | EXAM STATS | FEEDBACK

Technical

Q #1 | Multiple Choice Type | Award: 1 | Penalty: 0.33 | Theory of Computation

Which of the following is **FALSE** about Recursive/Recursive Enumerable Languages?

A. Recursive enumerable languages are not closed under complementation

B. Complement of context — free language must be recursive

C. Membership problem is not decidable under recursive languages

D. None of these

Your Answer: | Correct Answer: C | Not Attempted | Time taken: 00min 00sec | Discuss

Q #2 | Multiple Select Type | Award: 1 | Penalty: 0 | Theory of Computation

Regarding regular languages, consider the following statements.

I. Regular languages can be expressed by Moore and Mealy machines.
II. Regular languages can be expressed by a finite automaton.
III. If A and B are regular languages, then $\mathrm{A} \cap \mathrm{B}$ is also regular.
IV. Let $\mathrm{B} = \{ba, na\}$. It can be said that $\mathrm{B}^* = \{\lambda, ba, na, ab, an, baba, bana, naba, anab, nana, aban, bababa, babana, banaba, banana, nababa, nabana, nanaba, nanana, abanba, babababa, ...\}$.

Select the correct alternative.

A. Only statements I and II are correct.
B. Only statements I and IV are correct.
C. Only statements III and IV are correct.
D. Only statements I, II, and III are correct.

Your Answer: | Correct Answer: D | Not Attempted | Time taken: 00min 00sec | Discuss

Q #3 | Multiple Choice Type | Award: 1 | Penalty: 0.33 | Theory of Computation

If the initial state is also the final state in a finite automaton, then that automaton

A. does not accept the empty string.

B. accepts the empty string.

C. is deterministic.

D. has no other final states.

Your Answer: | Correct Answer: B | Not Attempted | Time taken: 00min 00sec | Discuss

Q #4 | Numerical Type | Award: 1 | Penalty: 0 | Theory of Computation

Consider a Non Deterministic Finite Automaton (NFA) with 6 states. Applying the subset construction algorithm for converting an NFA to a Deterministic Finite Automaton (DFA), what is the maximum number of states that the DFA would have?

Your Answer: | Correct Answer: 64 | Not Attempted | Time taken: 00min 00sec | Discuss

Q #5 | Multiple Choice Type | Award: 1 | Penalty: 0.33 | Theory of Computation

Regarding closure for context free languages, assign T (true) or F (false) to the following operations.

( ) Concatenation.

( ) Complement.

( ) Homomorphism.

( ) Intersection.

( ) Reverse.

Select the option that contains, from top to bottom, the correct sequence.

A. T, T, F, F, T.

B. T, F, T, T, F.

C. T, F, T, F, T.

D. F, T, T, F, F.

Your Answer: | Correct Answer: C | Not Attempted | Time taken: 00min 00sec | Discuss

Q #6 | Multiple Choice Type | Award: 1 | Penalty: 0.33 | Theory of Computation

Mark the FALSE option

A. The set of all Turing machines is countable.

B. The set of all Regular Expressions is enumerable.

C. Every Regular Language is enumerable.

D. No infinite set is countable.

Your Answer: | Correct Answer: D | Not Attempted | Time taken: 00min 00sec | Discuss

Q #7 | Multiple Choice Type | Award: 1 | Penalty: 0.33 | Theory of Computation

Analyze the following statements.

I. Every non deterministic finite automaton can be simulated by a deterministic finite automaton.

II. Every deterministic finite automaton can be simulated by a non deterministic finite automaton.

III. Every non deterministic finite automaton can be simulated by a deterministic pushdown automaton.

IV. Every deterministic pushdown automaton can be simulated by a non deterministic finite automaton.

V. Every non deterministic finite automaton can be simulated by a deterministic Turing machine.

The analysis allows us to conclude that,

A. only statements I, II, III, and IV are CORRECT.

B. only statements II, III, and V.

C. only statements I, II, III, and V are CORRECT.

D. only statements II and IV.

Your Answer: | Correct Answer: C | Not Attempted | Time taken: 00min 00sec | Discuss

Q #8 | Multiple Choice Type | Award: 1 | Penalty: 0.33 | Theory of Computation

Analyze the following regular expression equalities:

I. $a^* = (a^*)^*$

II. $(a+b)^* = (b+a)^*$

III. $a^* + b^* = (a+b)^*$

The analysis allows us to conclude that

A. only equalities I and II are true.

B. only equality I is true.

C. only equalities II and III are true.

D. all equalities are true.

Your Answer: | Correct Answer: A | Not Attempted | Time taken: 00min 00sec | Discuss

Q #9 | Multiple Choice Type | Award: 1 | Penalty: 0.33 | Theory of Computation

$\mathrm{S1}$: If A, B and C are all mutually disjoint languages such that $\mathrm{A} \cap \mathrm{B} = \mathrm{C}$ and B, C are both regular, then A must also be regular.

$\mathrm{S2}$: If L is regular, then so is the language $\{xy \mid x \in L, y \text{ not belongs to } L\}$

A. Only $\mathrm{S1}$ is true

B. Only $\mathrm{S2}$ is true

C. Both $\mathrm{S1}$ and $\mathrm{S2}$ are true

D. Both $\mathrm{S1}$ and $\mathrm{S2}$ are false

Your Answer: | Correct Answer: B | Not Attempted | Time taken: 00min 00sec | Discuss

Q #10 | Multiple Choice Type | Award: 1 | Penalty: 0.33 | Theory of Computation

Which of the following statements is false?

A. Given a Turing machine $\mathbf{M}$ with input alphabet $\boldsymbol{\Sigma}$ and a string $\boldsymbol{w} \in \boldsymbol{\Sigma}^*$, it is not known whether the computation of $\mathbf{M}$ with input $\boldsymbol{w}$ will halt or not.

B. The halting problem is undecidable.

C. There is no algorithm that determines when an arbitrary context-free grammar is ambiguous.

D. There is no deterministic finite automaton that recognizes a context-free language.

Your Answer: | Correct Answer: D | Not Attempted | Time taken: 00min 00sec | Discuss

Q #11 | Multiple Choice Type | Award: 1 | Penalty: 0.33 | Theory of Computation

Which of the following statements is false?

A. Every non-deterministic finite automaton with empty transitions can be reduced to a deterministic finite automaton.
B. Not every non-deterministic pushdown automaton can be reduced to a deterministic pushdown automaton.
C. Every Turing machine with $\mathrm{N} \geq 1$ tapes can be reduced to a standard Turing machine with one tape.
D. To prove that a language is regular, it suffices to use the pumping lemma of regular languages.

Your Answer: | Correct Answer: D | Not Attempted | Time taken: 00min 00sec | Discuss

Q #12 | Multiple Choice Type | Award: 1 | Penalty: 0.33 | Theory of Computation

Let $\Sigma = \{a, b\}$.

A regular expression denoting the language

$\mathrm{L} = \{w \in \Sigma^*$ such that every occurrence of 'a' in w is immediately followed by 'b' $\}$ is:

A. $(a^*b)^*$

B. $(b + ab)^*$

C. a^*b

D. $b + (ab)^*$

Your Answer: | Correct Answer: B | Not Attempted | Time taken: 00min 00sec | Discuss

Q #13 | Multiple Choice Type | Award: 1 | Penalty: 0.33 | Theory of Computation

The following regular expressions denote the languages $\mathrm{P}, \mathrm{Q}, \mathrm{L}$, and R , respectively:
$(1 + 10)^*, (0 + 01)^*, (0 + 1)^*, 0(11)^* + 1(00)^*$.

It cannot be stated that:

A. $\mathrm{P} \cap \mathrm{Q} \neq \varnothing$
B. $\mathrm{P} \cup \mathrm{Q} \neq \mathrm{L}$
C. $\mathrm{P} \cap \mathrm{Q} = \{\varepsilon\}$
D. $(1 + 0)^* \backslash \mathrm{P} = \mathrm{Q}$

Your Answer: | Correct Answer: D | Not Attempted | Time taken: 00min 02sec | Discuss

Q #14 | Multiple Choice Type | Award: 1 | Penalty: 0.33 | Theory of Computation

Consider the following statements about finite automata and regular expressions:

I. The class of languages accepted by a Deterministic Finite Automaton (DFA) is not the same as that of a Non Deterministic Finite Automaton (NFA).

II. For some regular expressions, it is not possible to construct a DFA.

III. The regular expression $(b + ba)^+$ accepts strings of b's and a's starting with b and not having two consecutive a's.

Select the correct statement:

A. Statements I and II are true

B. Statements I and III are false

C. Only statement III is true

D. Statements II and III are false

Your Answer: | Correct Answer: C | Not Attempted | Time taken: 00min 00sec | Discuss

Q #15 | Multiple Choice Type | Award: 1 | Penalty: 0.33 | Theory of Computation

Regarding Chomsky's hierarchy, we can state that:

A. A recursively enumerable language cannot be a regular language

B. Context-free languages and context-sensitive languages exclude each other

C. A language that is not regular is context-free

D. There are languages that are neither context-free nor context-sensitive

Your Answer: | Correct Answer: D | Not Attempted | Time taken: 00min 00sec | Discuss

Q #16 | Multiple Choice Type | Award: 2 | Penalty: 0.67 | Theory of Computation

Indicate how many character sequences below are recognized by the finite automaton below. The four character sequences (separated by commas) are: $0, +567, -89.5, -3e3$.

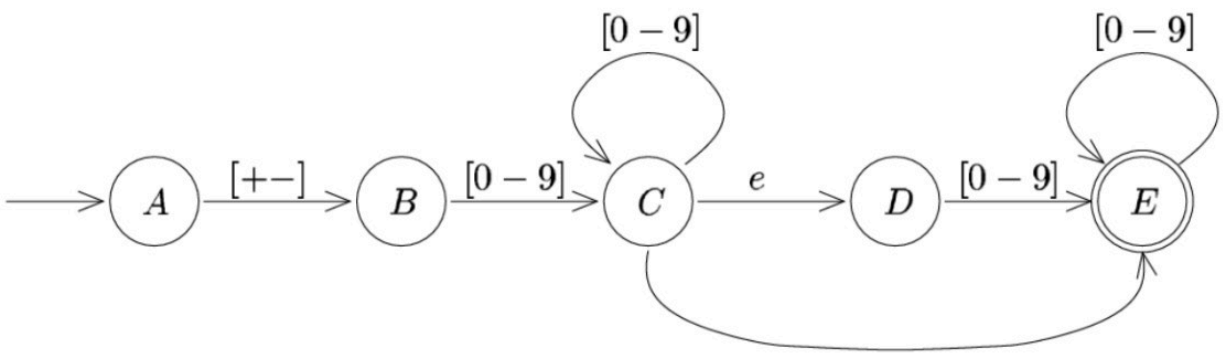

A. 0

B. 1

C. 2

D. 3

Your Answer: | Correct Answer: C | Not Attempted | Time taken: 00min 00sec | Discuss

Q #17 | Multiple Choice Type | Award: 2 | Penalty: 0.67 | Theory of Computation

Given that a language $L_A = L_1 \cup L_2$, where L_1 & L_2 are two other languages. If L_A is known to be a regular language, then which of the following statements is **necessarily TRUE**?

A. If L_1 is regular, then L_2 will also be regular

B. If L_1 is regular and finite, then L_2 will be regular

C. If L_1 is regular and finite, then L_2 will be regular and finite

D. None of these

Your Answer: | Correct Answer: B | Not Attempted | Time taken: 00min 00sec | Discuss

Q #18 | Multiple Choice Type | Award: 2 | Penalty: 0.67 | Theory of Computation

Consider the following statements :

I. if a deterministic finite automaton M over the alphabet Σ accepts all strings of length less than or equal to the number of states in M , then it must accept all strings over Σ.

II. if a non-deterministic finite automaton M over alphabet Σ accepts all strings of length less than or equal to the number of states in M, then it must accept all strings over Σ.

III. if a deterministic finite automaton M over alphabet Σ accepts any string at all, then it accepts some string whose length is less than the number of states in M.

IV. if a non-deterministic finite automaton M over alphabet Σ accepts any string at all, then it accepts some string whose length is less than the number of states in M.

Which of the above statements is/are correct?

A. Only III.

B. Only I, III, IV

C. Only I, II, III

D. ALL

Your Answer: | Correct Answer: D | Not Attempted | Time taken: 00min 00sec | Discuss

Q #19 | Multiple Choice Type | Award: 2 | Penalty: 0.67 | Theory of Computation

Consider the following program snippet:
1. i := 1;
2. while i <= n do begin
3. sum := sum + a[i];
4. i := i + 1; end;

Consider that:

- I represents the initialization of variable $\mathbf{i} := 1$ on line 1 ;
- T represents the test on line 2;
- A represents the commands on line 3;
- P represents the increment on line 4.

What is the regular expression that represents all possible sequences of steps that can be executed by this program snippet?

A. $\mathrm{I(TAP)}^+$
B. $I(TAP)*$
C. $IT + AP$
D. $IT(APT)*$

Your Answer: | Correct Answer: D | Not Attempted | Time taken: 00min 00sec | Discuss

Q #20 | Multiple Choice Type | Award: 2 | Penalty: 0.67 | Theory of Computation

Consider an output-producing, deterministic finite state automaton (DFA) of the kind indicated in the figure below, in which it is assumed that every state is a final state.

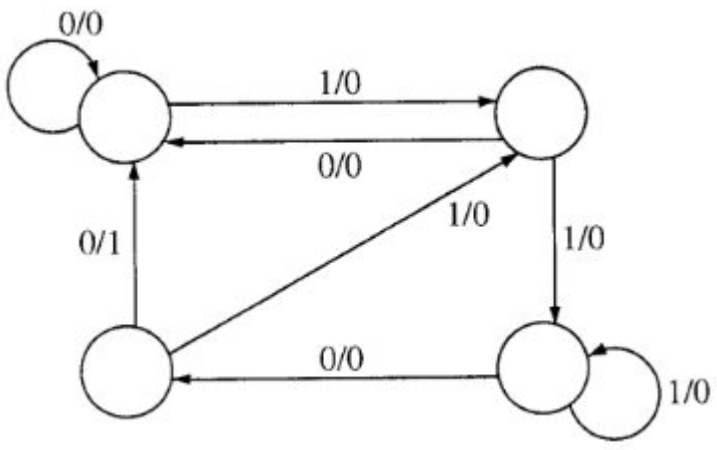

Assume that the input is at least four bits long. Which of the following is(are) true?

I. The last bit of the output depends on the start state.

II. If the input ends with "1100", then the output must end with "1".

III. The output cannot end with "1" unless the input ends with "1100".

A. I only

B. II only

C. II and III only

D. I and II only

Your Answer: | Correct Answer: C | Not Attempted | Time taken: 00min 00sec | Discuss

Q #21 | Multiple Choice Type | Award: 2 | Penalty: 0.67 | Theory of Computation

Let the formal language be $L = \{a^n b^{2n} c, n \geq 0\}$. Analyze the following statements.

I. L is a context free language.

II. The grammar $\mathrm{G} = (\{\mathrm{S}, \mathrm{X}\}, \{a, b, c\}, \{\mathrm{S} \rightarrow \mathrm{X}c, \mathrm{X} \rightarrow a\mathrm{X}bb \mid \varepsilon\}, \mathrm{S})$ generates the language L.

III. L cannot be recognized by a pushdown automaton.

A. only statements I and II

B. only statements I and III

C. only statements II and III

D. all statements.

Your Answer: | Correct Answer: A | Not Attempted | Time taken: 00min 00sec | Discuss

Q #22 | Multiple Choice Type | Award: 2 | Penalty: 0.67 | Theory of Computation

Select the option that presents the FALSE statement.

A. Every regular language is recognized by an NFA with exactly 374 accepting states.

B. A problem is said to be decidable if the language associated with that problem is recursive.

C. The set of all programs that halt for a given input is a recursive set but not recursively enumerable.

D. For every language L, if there is a DFA that accepts every string not in L, then L is regular.

Your Answer: | Correct Answer: C | Not Attempted | Time taken: 00min 00sec | Discuss

Q #23 | Multiple Choice Type | Award: 2 | Penalty: 0.67 | Theory of Computation

Consider the following grammars :

$$\begin{array}{llll} I) & II) & III) & IV) \\ A \rightarrow bA & B \rightarrow BB & C \rightarrow CaC & D \rightarrow EE \\ A \rightarrow aA & B \rightarrow b & A \rightarrow AcA & EE \rightarrow FG \\ A \rightarrow \varepsilon & & A \rightarrow aca & F \rightarrow a \mid aF \\ & & & G \rightarrow b \mid bG \end{array}$$

In this regard, mark the FALSE statement.

A. Grammar I is context free.
B. Grammar II is context free.
C. Grammar III is context free.
D. Grammar IV is context free.

Your Answer: | Correct Answer: D | Not Attempted | Time taken: 00min 00sec | Discuss

Q #24 | Multiple Choice Type | Award: 2 | Penalty: 0.67 | Theory of Computation

Consider the finite automaton shown in the figure below, which operates on the alphabet $\Sigma = \{a, b\}$ (the bold circle indicates a terminal state):

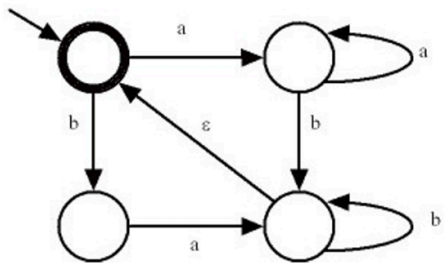

Analyze the following statements.

I. The finite automaton shown in the figure is deterministic.

II. The finite automaton shown in the figure is non deterministic.

III. The finite automaton shown in the figure recognizes the empty word.

The analysis allows us to conclude that

A. all statements are false.

B. only statement I is false.

C. only statement II is false.

D. only statement III is false.

Your Answer: | Correct Answer: B | Not Attempted | Time taken: 00min 00sec | Discuss

Q #25 | Multiple Choice Type | Award: 2 | Penalty: 0.67 | Theory of Computation

Let the alphabet be $\Sigma = \{a, b\}$ and the regular language
$L = \{\omega \mid \omega \in \Sigma^*$ and the number of a's in ω is even $\}$.
Which of the regular expressions below generates this language?

A. $(ab * ab*)^*$
B. ((aa)* $\mid b^*)^*$
C. (b* $\mid (aa)^* \mid b^*)^*$
D. (b* a b* a b*)*

Your Answer: | Correct Answer: D | Not Attempted | Time taken: 00min 00sec | Discuss

Q #26 | Multiple Select Type | Award: 2 | Penalty: 0 | Theory of Computation

If DFA denotes "deterministic finite automata" and NDFA denotes "nondeterministic finite automata," which of the following is **FALSE**?

A. For any language L, if L can be recognized by a DFA, then $\bar{L}$ can be recognized by a DFA.

B. For any language L, if L can be recognized by an NDFA, then $\bar{L}$ can be recognized by an NDFA.

C. For any language L, if L is context-free, then $\bar{L}$ is context-free.

D. For any language L, if L can be recognized in polynomial time, then $\bar{L}$ can be recognized in polynomial time.

Your Answer: | Correct Answer: C | Not Attempted | Time taken: 00min 00sec | Discuss

Q #27 | Multiple Select Type | Award: 2 | Penalty: 0 | Theory of Computation

Considering the languages, $\mathrm{L}_1 = \left\{a^l c^m b^n; l \geq 0, m \geq 0, n \geq 0\right\}$ and $\mathrm{L}_2 = \left\{a^l c^m b^n; l \geq 0, m \geq 0, n = l + m\right\}$ over the alphabet $\Sigma = \{a, b, c\}$, consider the following statements.

I. L_1 is a regular language.

II. L_2 is a regular language.

III. There is a deterministic pushdown automaton that recognizes L_1.

IV. The language L_2 can be generated by $\mathrm{G} = (\{\mathrm{X}, \mathrm{Y}\}, \{a, b, c\}, \{\mathrm{X} \rightarrow a\mathrm{Xb}, \mathrm{X} \rightarrow \mathrm{Y}, \mathrm{Y} \rightarrow \mathrm{cYb}, \mathrm{Y} \rightarrow \varepsilon\}, \mathrm{X})$, where ε is the empty string.

Which of the above statements are correct?

A. I

B. II

C. III

D. IV

Your Answer: | Correct Answer: A;C;D | Not Attempted | Time taken: 00min 00sec | Discuss

Q #28 | Multiple Select Type | Award: 2 | Penalty: 0 | Theory of Computation

With regard to languages and their acceptors, consider the following statements.

I. $\{\mathrm{ww}^{\mathrm{rev}} \mid \mathrm{w} \in \{\mathrm{a}, \mathrm{b}\}^*\}$ is accepted by a deterministic pushdown automaton.
II. $\{\mathrm{wcw}^{\mathrm{rev}} \mid \mathrm{w} \in \{\mathrm{a}, \mathrm{b}\}^*\}$ is accepted by a non-deterministic finite automaton.
III. $\{\mathrm{a}, \mathrm{b}\}^* - \{\mathrm{ww} \mid \mathrm{w} \in \{\mathrm{a}, \mathrm{b}\}^*\}$ is accepted by a non-deterministic pushdown automaton.
IV. $\{\mathrm{M} \mid \mathrm{M}$ is a Turing Machine and M halts $\}$ is accepted by a non-deterministic Turing Machine.

which of the above is/are correct?

A. I
B. II
C. III
D. IV

Your Answer: | Correct Answer: C;D | Not Attempted | Time taken: 00min 00sec | Discuss

Q #29 | Multiple Choice Type | Award: 2 | Penalty: 0.67 | Theory of Computation

What is the language accepted by the following CFG?

$$S \to bS \mid aB$$
$$A \to bA \mid b \mid aS$$
$$B \to aS \mid bA \mid b$$

A. Strings over $\Sigma = \{a, b\}$ contains even number of a's and ends with b

B. Strings over $\Sigma = \{a, b\}$ contains odd number of a's and ends with b

C. Strings over $\Sigma = \{a, b\}$ contains odd number of b's and ends with a

D. None of these

Your Answer: | **Correct Answer: B** | Not Attempted | Time taken: 00min 00sec | Discuss

Q #30 | Multiple Choice Type | Award: 2 | Penalty: 0.67 | Theory of Computation

Comments in the C programming language are introduced by the characters $/*$ and terminated by the characters $*/$.

A comment begins with $/*$ and includes all characters through the next occurrence of the character sequence $*/$.

Comments do not nest i.e. Comments consist of a string surrounded by $/*$ and $*/$, without an intervening $*/$.

Which of the following regular expressions describe precisely the set of all valid C comments.

Assume for convenience that the character set is $\{*, /, \mathrm{a})$.

A. $/*(/|\mathrm{a}|*)^**/$

B. $/*(\mathrm{a}|/)^**(*|\mathrm{a}(\mathrm{a}|/)^**)^*/$

C. $/*(\mathrm{a}|/)^**(*|\mathrm{a}(\mathrm{a}|/)^**)^***/$

D. $/*(\mathrm{a}|/|**^*\mathrm{a})^***/$

Your Answer: | **Correct Answer: B** | Not Attempted | Time taken: 00min 00sec | Discuss

Copyright & Stuff